Tunable filter based on whispering gallery modes

A.A. Savchenkov, V.S. Ilchenko, A.B. Matsko and L. Maleki

A narrowband, widely tunable filter based on a whispering gallery mode $LiNbO_3$ cavity with 10 GHz free spectral range is proposed and demonstrated. The filter operates at 1.55 μm with 30 MHz bandwidth and can be electro-optically tuned at 10 GHz in the linear regime with approximately 40 MHz/V tuning rate. With this filter, we have demonstrated 12 dB fibre-to-fibre insertion loss and 30 μs tuning speed.

Introduction: Tunable optical filters are the key elements for reconfigurable networking wavelength division multiplexing (WDM), and analogue RF photonics communication links [1, 2]. Desirable characteristics for the filters include fast tuning speed, small size, wide tuning range, low power consumption, and low cost. Wavelength demultiplexing and channel sections in WDM systems require tunable narrowband optical filters that are compatible with singlemode fibres.

Fabry–Perot and fibre Fabry–Perot tunable filters are among the vast variety of tunable optical filters demonstrated recently [2]. Fabry–Perot filters are characterised by the finesse, a useful figure of merit, which is equal to the ratio of the filter free spectral range (FSR) and the bandwidth. Finesse indicates how many channels can fit in one span of the FSR. A Fabry–Perot filter typically has a finesse of 100, a 125 GHz bandwidth, and a tuning speed in the millisecond range [1]. These filters also meet the −20 dB channel-to-channel isolation condition for 50 GHz channel spacing.

In this Letter we report the realisation of a miniature resonant electro-optically tunable filter. The filter is based on a micro-disc whispering gallery mode (WGM) cavity fabricated from a commercially available lithium niobate wafer. The filter may be characterised along the same lines as with a Fabry–Perot filter.

Our filter operates at 1.55 μm wavelength, though the wavelength of operation is limited only by the absorption loss of lithium niobate and can be anywhere from about 1.0 to 1.7 μm. The reproducible value of finesse of the filter (F) exceeds $F = 300$, but in some experiments we have achieved $F = 1000$. The tuning speed of the filter is approximately 10 ns, while the actual spectrum shifting time is determined by the 30 MHz bandwidth of the filter and does not exceed 30 μs. We observe at least −20 dB suppression of the channel crosstalk for a 50 MHz channel spacing. A proof-of-principle transmission of an analogue image signal through the filter was realised.

Experimental results: A schematic diagram of the filter configuration is shown in Fig. 1. A Z-cut $LiNbO_3$ disk cavity has $d = 4.8$ mm in diameter and 170 μm in thickness [3]. The cavity perimeter edge is prepared in the toroidal shape with a 100 μm radius of curvature. We studied several nearly identical disks. The repeatable value of the quality factor of the main sequence of the cavity modes is $Q = 5 \times 10^6$ (the observed maximum is $Q = 5 \times 10^7$), which corresponds to the 30 MHz bandwidth of the mode. Light is sent into and retrieved out of the cavity via coupling diamond prisms. The repeatable value of fibre-to-fibre insertion loss with this technique is 20 dB (the minimum measured insertion loss is ≃12 dB). The maximum transmission is achieved when light is resonant with the cavity modes. Tuning of the filter is achieved by applying a voltage to the top and bottom surfaces of the disk coated with a conducting material. This conductive coating is absent on the central part of the cavity perimeter edge where WGMs are localised.

The maximum frequency shift of the TE and TM mode may be found from [4]

$$\Delta\nu_{TE} = \nu_0 \frac{n_e^2}{2} r_{33} E_Z \quad \text{and} \quad \Delta\nu_{TM} = \nu_0 \frac{n_0^2}{2} r_{13} E_Z$$

where $\nu_0 = 2 \times 10^{14}$ Hz is the carrier frequency of the laser, $r_{33} = 31$ pm/V and $r_{13} = 10$ pm/V are the electro-optic constants, $n_0 = 2.28$ and $n_e = 2.2$ are the refractive indices of $LiNbO_3$. We worked with TM modes because they produce better quality factors than the TE modes. If the quality factor is not very important, it is better to work with the TE modes because their electro-optic shifts are three times as much as those of TM modes for the same values of the applied voltage.

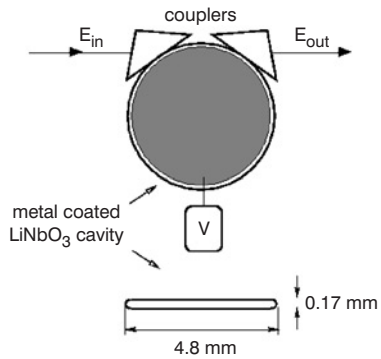

Fig. 1 *Filter setup (cavity coated with indium)*

Experimentally measured electro-optic tuning of the filter spectral response and tuning of the centre wavelength with the applied voltage is shown in Fig. 2. Changing the tuning voltage from zero to 10 V shifts the spectrum of the filter by 0.42 GHz for the TM polarisation, in agreement with the theoretical value. The filter exhibits linear voltage dependence in ±150 V tuning range, i.e. the total tuning span exceeds the FSR of the cavity.

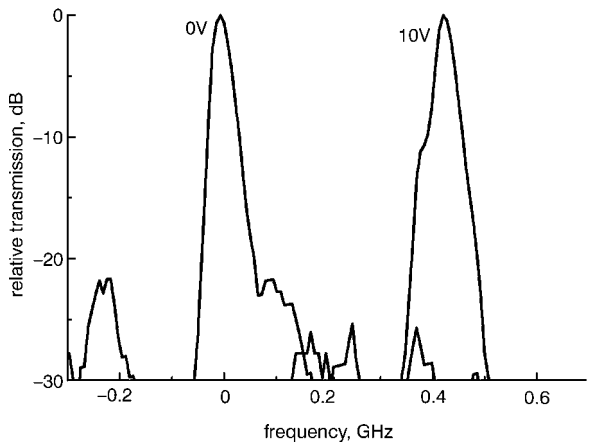

Fig. 2 *Transmission characteristics of filter*

Maximum transmission corresponds to 12 dB attenuation of input signal

It is interesting to note that the dependence $\Delta\nu(E_Z)$ has a hysteresis feature when a large DC electric field ($E_Z > 2$ MV/m) is applied to the cavity. The rapid change of the applied voltage results in an incomplete compensation of the mode shift, i.e. $\Delta\nu(E_Z = 0) \neq 0$, and the resonance frequency returns to its initial position several seconds after the electric field is switched off. The maximum frequency tuning of the filter in this nonlinear regime was approximately 40 GHz. The physical origin of the hysteresis will be discussed elsewhere.

The insertion losses in our scheme are primarily due to the inefficient coupling technique with the diamond prism configuration. We believe that antireflection coating of the coupling prisms or use of a special grating placed on a high-index fibre may reduce the losses significantly.

To demonstrate the filter performance we used it in an optical fibre line to transmit a video signal. Such transmission lines might be important for the development of portable optical domain microwave navigation and communication devices that can provide significantly higher capability in applications such as NASA planetary explorations. The scheme of the transmission line used in the experiment is shown in Fig. 3. A video signal with an approximately 20 MHz FWHM bandwidth and zero carrier frequency is sent from a CCD camera to a mixer, where it is mixed with a 10 GHz microwave carrier. The resulting modulated microwave signal is filtered to suppress the higher harmonics, and is amplified and upconverted into light using a Mach-Zehnder electro-optic modulator. The modulated signal is then sent through our filter, heterodyned and detected with a fast photodiode. The photodiode output is mixed with a microwave carrier to restore the initial signal. An example of pictures transmitted with and without the filter is shown in Fig. 4.

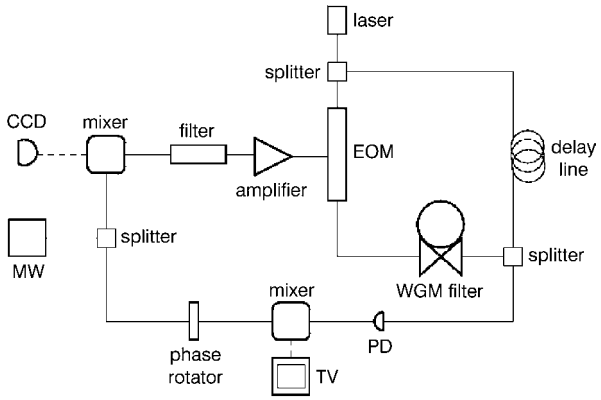

Fig. 3 *Schematic diagram of video signal transmission experiment*

—— optical fibres
▬▬ microwave waveguides
– – – electric circuits

a *b*

Fig. 4 *Transmitted video signal*

a Without filter
b With filter

It is important to note that, in order to characterise the filtered signal and retrieve the encoded information, the filter output should be mixed with the light field and measured with a photodiode. The filter is a high-Q cavity that adds a group delay to the signal. If the laser used in the experiment has a large linewidth, this group delay results in a frequency-to-amplitude laser noise conversion, unless the scheme is balanced. To avoid this conversion we inserted the filter into a Mach-Zehnder configuration with a fibre delay line L_f to compensate for the group delay. The delay line length is equal to $L_f = dn_0F/2n_f = 1.2$ m, where $n_f = 1.5$ is the refractive index of the fibre material and $F = 300$ is the cavity finesse. Such a compensation is not required if the laser linewidth is much smaller than the width of the cavity resonance. In our case the optical characterisation of the filter was achieved using a semiconductor diode laser with a 30 MHz FWHM line, which is quite large. The laser power in the fibre was $\simeq$2.5 mW.

Conclusion: We have experimentally realised a tunable optical domain microwave filter that uses high-Q whispering gallery modes excited in a disk-shaped $LiNbO_3$ cavity. The experimental results are in agreement with the theory. The filter is useful for high-density telecommunication networks, as well as in microwave photonics communication systems.

Acknowledgments: The research described in this Letter was carried out by the Jet Propulsion Laboratory, California Institute of Technology, and was partially funded by ONR through SPAWAR, under a contract with the National Aeronautics and Space Administration. A.A. Savchenkov acknowledges support from the National Research Council.

© IEE 2003
11 December 2002
Electronics Letters Online No: 20030229
DOI: 10.1049/el:20030229

A.A. Savchenkov, V.S. Ilchenko, A.B. Matsko and L. Maleki (*Jet Propulsion Laboratory, California Institute of Technology, 4800 Oak Grove Drive, Pasadena, California 91109-8099, USA*)

E-mail: andrey.matsko@jpl.nasa.gov

References

1 SADOT, D., and BOIMOVICH, E.: 'Tunable optical filters for dense WDM networks', *IEEE Commun. Mag.*, 1998, **36**, pp. 50–55
2 ELMIRGHANI, J.M.H., and MOUFTAH, H.T.: 'Technologies and architectures for scalable dynamic dense WDM networks', *IEEE Commun. Mag.*, 2000, **38**, pp. 58–66
3 ILCHENKO, V.S., SAVCHENKOV, A.A., MATSKO, A.B., and MALEKI, L.: 'Whispering-gallery-mode electro-optic modulator and photonic microwave receiver', *J. Opt. Soc. Am. B.*, 2003, **20**, (2) (to be published)
4 BOYD, R.W.: 'Nonlinear optics' (Academic Press, New York, 1992)